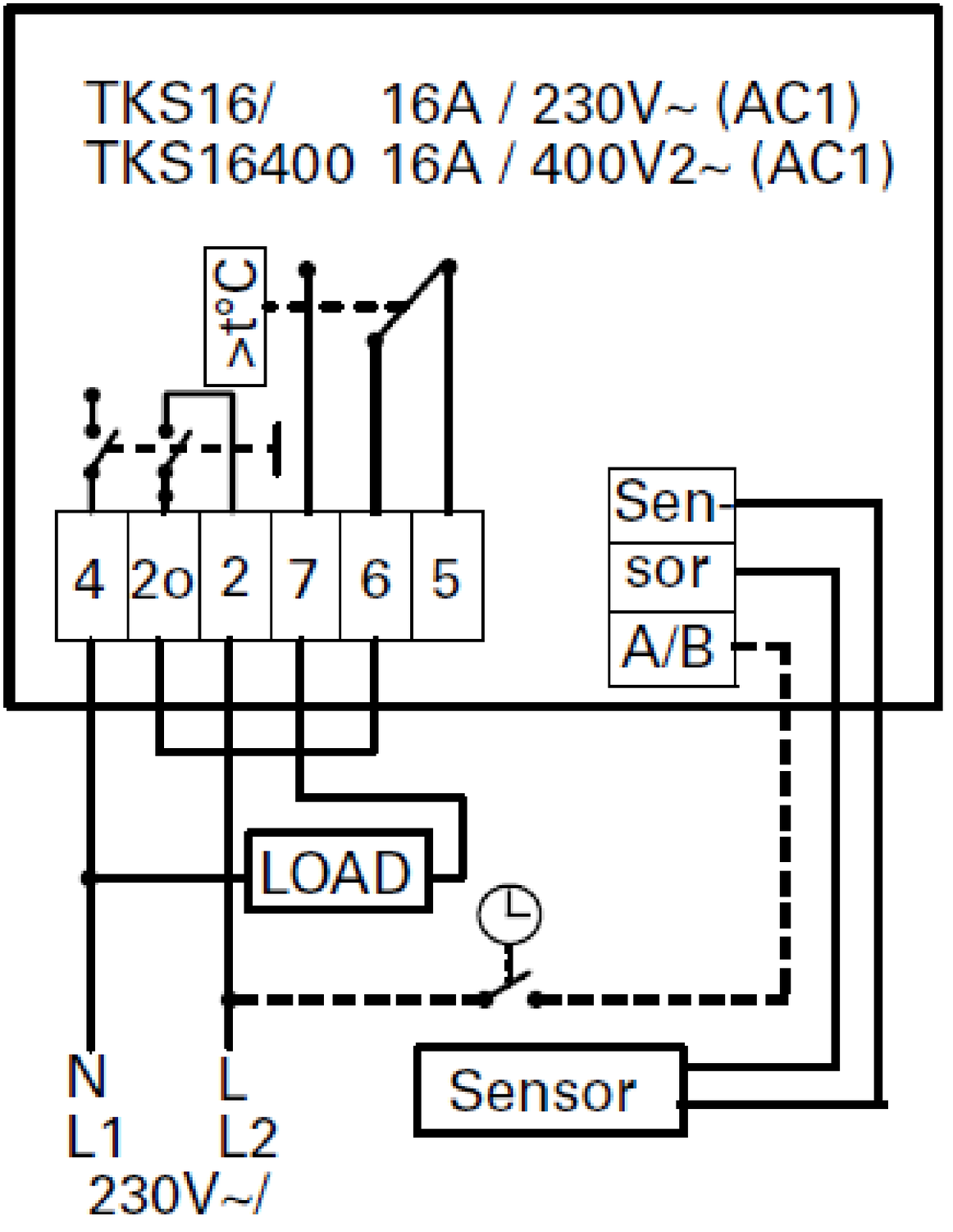
TKS16/ 16A / 230V~ (AC1)
TKS16400 16A / 400V2~ (AC1)
>t°C
4
2o
2
7
6
5
Sen-
sor
A/B
LOAD
Sensor
N
L1
L
L2
230V~/